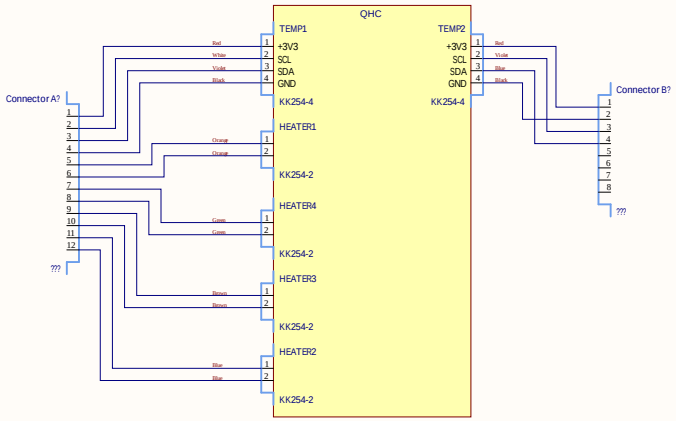

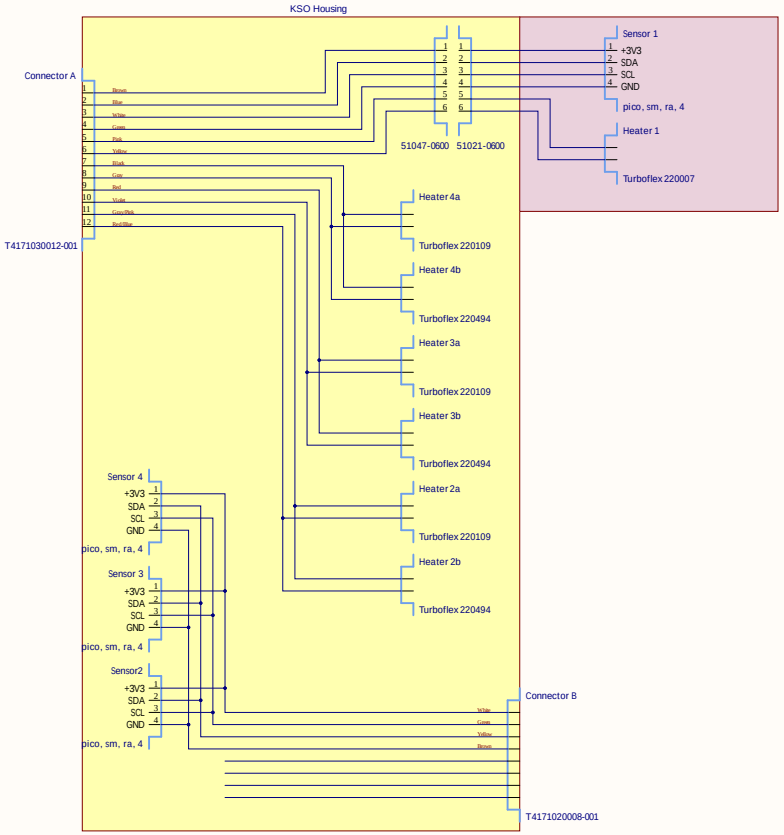

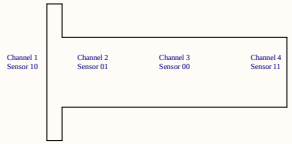

Heaters:
220007 Polyimide Heater, 1" wide 6" long 24.0 ohms 1 Watts/in 12 Volts 6 Watts 0.5 amps
220109 Polyimide Heater, 3" wide 6" long 12.8 ohms 10 Watts/in 48 Volts 180 Watts 3.75 amps
220494 Polyimide Heater, 3" wide 5" long 15.36 ohms 10 Watts/in 48 Volts 150 Watts 3.13 amps

REVISIONS

ZONE	REV	DESCRIPTION	DATE	APPROVED

APPROVALS	DATE
DRAWN *	*
CHECKED *	
ENGINEER *	
PROJECT SCIENTIST	

ACCOUNT

Cannot open file C:\BIAO-SC\6000-IC-Operations\BIAO-Logos\Drawing\BioBlock-Logo_IC.png\logo.jpg. Does not exist.

SIZE D | DWG NO * | REV *

TITLE | SHEET * OF *